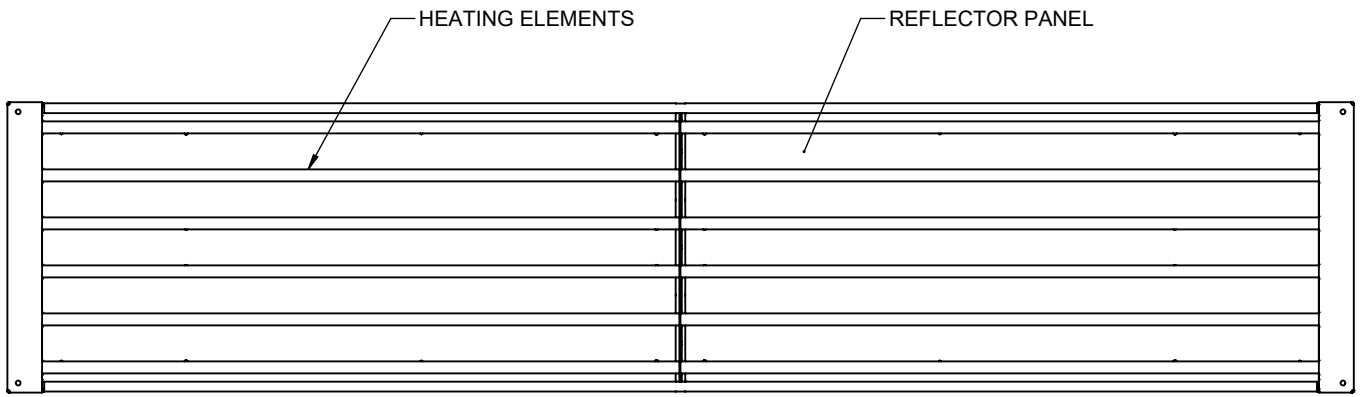
HEATING ELEMENTS
REFLECTOR PANEL

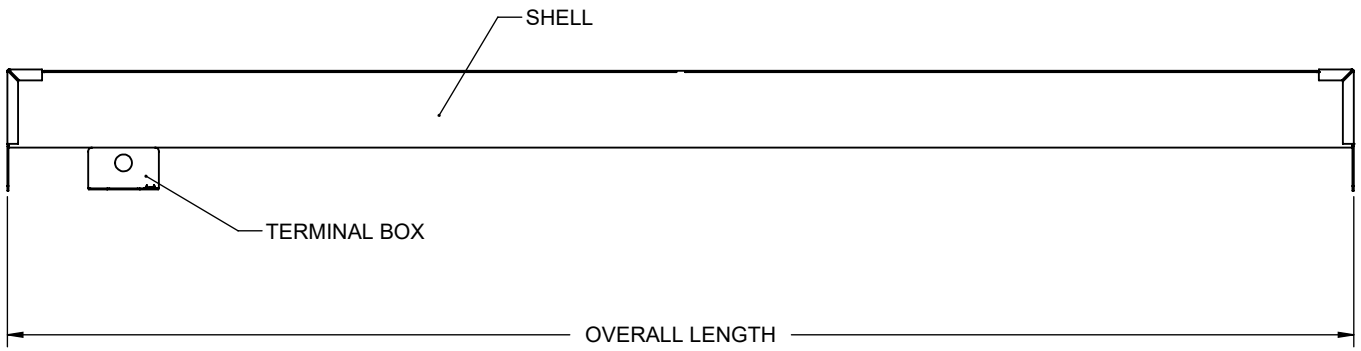
SHELL
TERMINAL BOX
OVERALL LENGTH

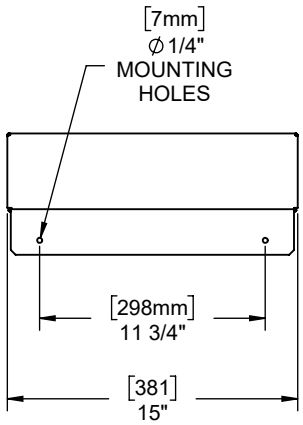
[7mm]
∅1/4"
MOUNTING
HOLES
[298mm]
11 3/4"
[381]
15"