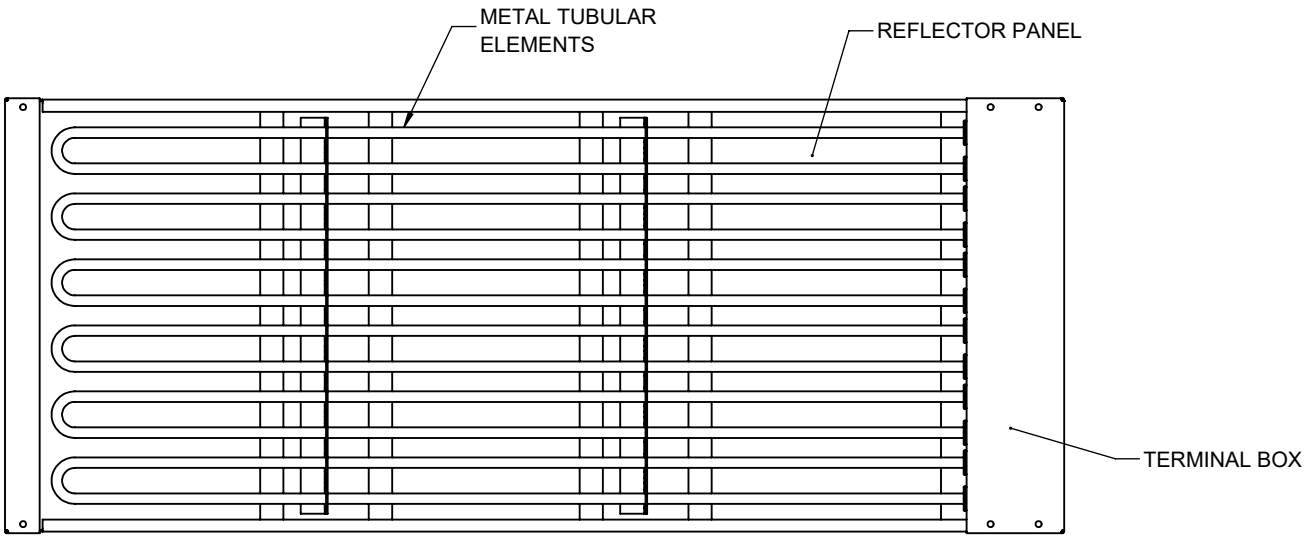
METAL TUBULAR
ELEMENTS
REFLECTOR PANEL
TERMINAL BOX

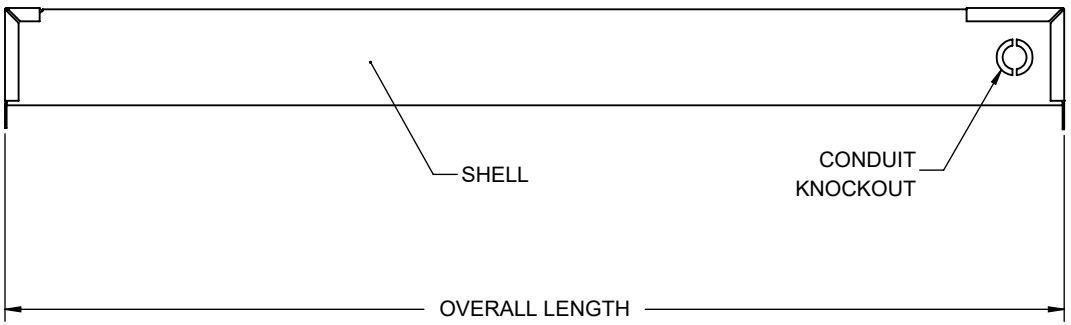
SHELL
CONDUIT
KNOCKOUT
OVERALL LENGTH

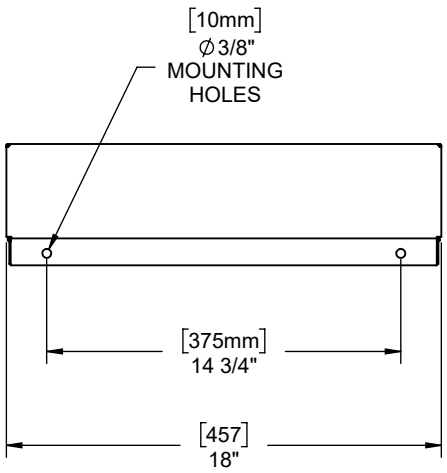
[10mm]
∅3/8"
MOUNTING
HOLES
[375mm]
14 3/4"
[457]
18"