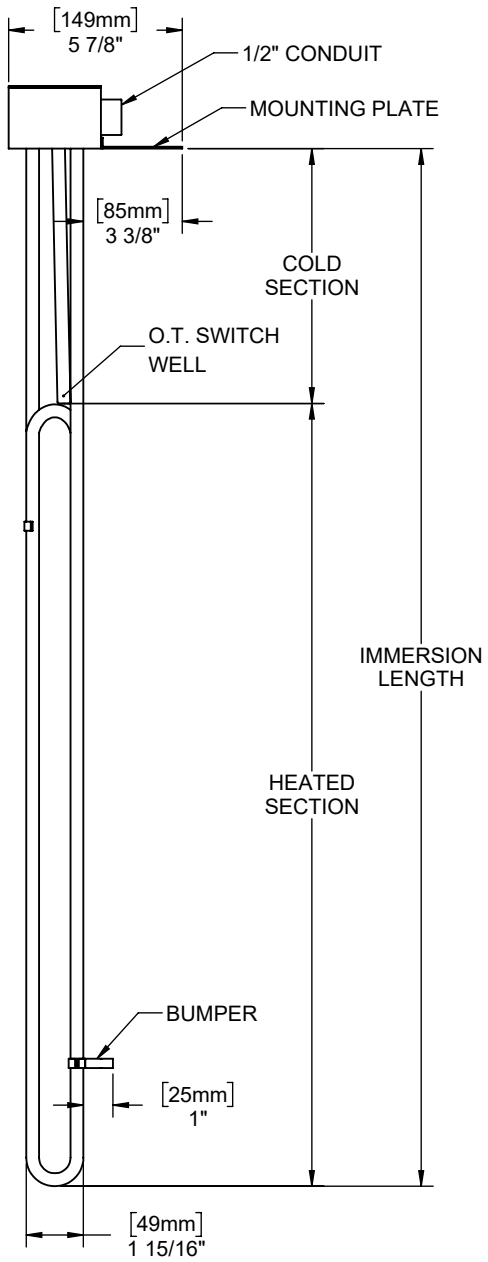
[149mm]
5 7/8"
1/2" CONDUIT
MOUNTING PLATE
[85mm]
3 3/8"
COLD
SECTION
O.T. SWITCH
WELL
IMMERSION
LENGTH
HEATED
SECTION
BUMPER
[25mm]
1"
[49mm]
1 15/16"

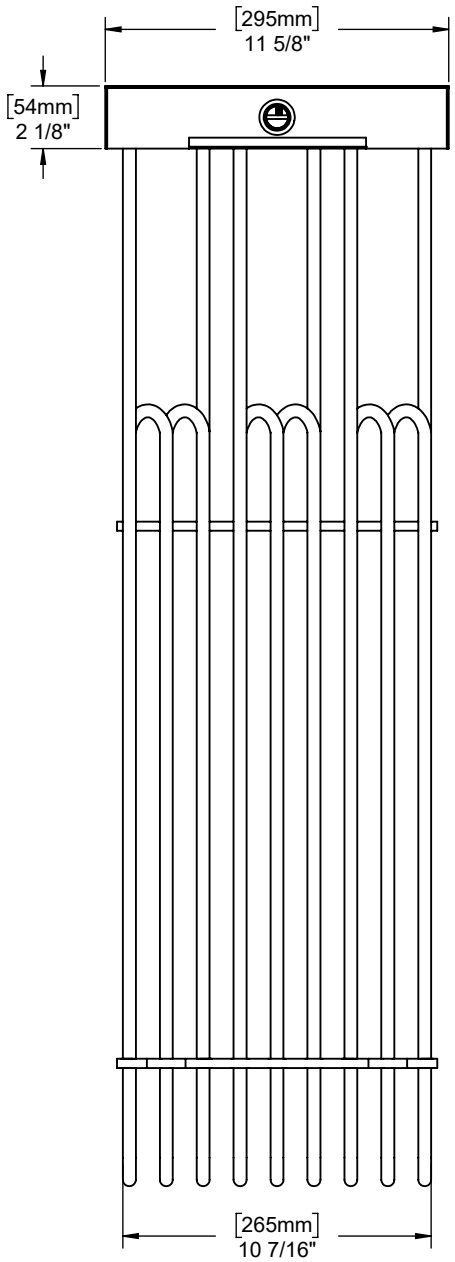
[295mm]
11 5/8"
[54mm]
2 1/8"
[265mm]
10 7/16"